Query Execution

DSCI 551

Wensheng Wu

Components of Query Processor

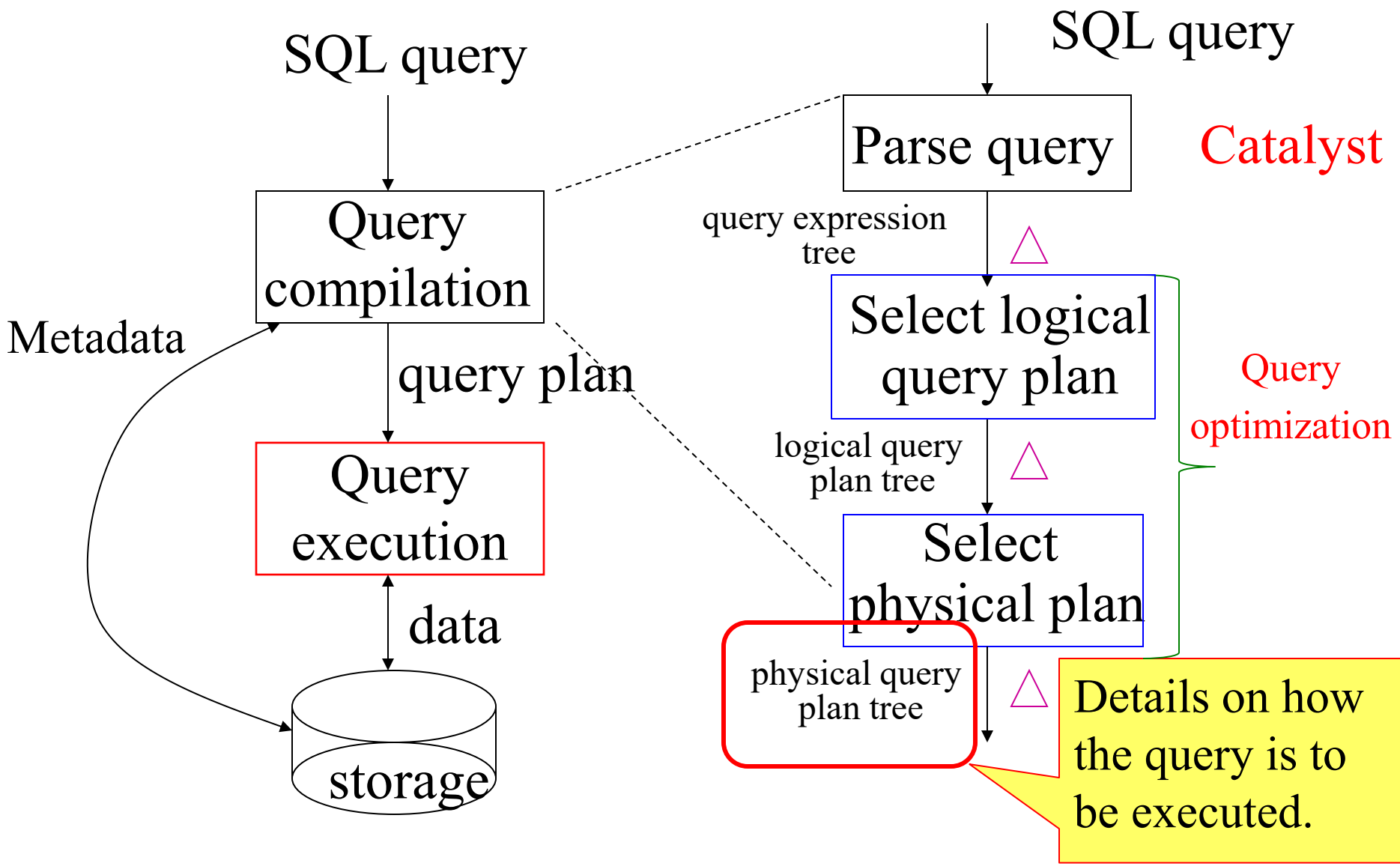

Converting SQL to Logical Plans

Select $a_1, \ldots, a_n$
From $R_1, \ldots, R_k$
Where C

$$\Pi_{a1,\ldots,an}(\sigma_C(R_1 \times R_2 \times \ldots \times R_k))$$

Select $b_1, \ldots, b_m$, aggs
From $R_1, \ldots, R_k$
Where C
Group by $b_1, \ldots, b_m$

$$\gamma_{b1, \ldots, bm, aggs}(\sigma_C(R_1 \times R_2 \times \ldots \times R_k))$$

Logical Query Optimization

- Apply algebraic laws to turn initial query plan into more efficient one

- Use heuristics
  - E.g., do selections & projection as early as possible

Example of Algebraic Law

- $\sigma_C (R \bowtie S) = \sigma_C (R) \bowtie S$

- That is, we can push selection down to R if condition C only contains attributes in R

Physical Query Optimization

- Turn logical query plan into physical ones
  - That is, plan with physical operators

- Pick a physical plan with the lowest cost (I/O's)
  - I.e., cost-based optimization

Outline

- Logical/physical operators
- Cost model
- One-pass algorithms
- Nested-loop joins: 1.x
- Two-pass algorithms
  - Sorting-based
  - Hashing-based
- Index-based algorithms

Logical vs. Physical Operators

- Logical operators
  - *what* they do
  - e.g., union, selection, projection, join, group-by
- Physical operators
  - *how* they do it
  - Main methods: scanning, hashing, sorting, and index-based
  - E.g., methods for implementing joins include:
    - nested loop join, sort-merge join, hash join, index join
  - Different methods may have different requirements on the amount of available memory & different costs

Logical Query Plans

```
SELECT   P.buyer
FROM     Purchase P, Person Q
WHERE    P.buyer=Q.name AND
         Q.city='LA'
```

Query Plan:

- Tree with logical operators

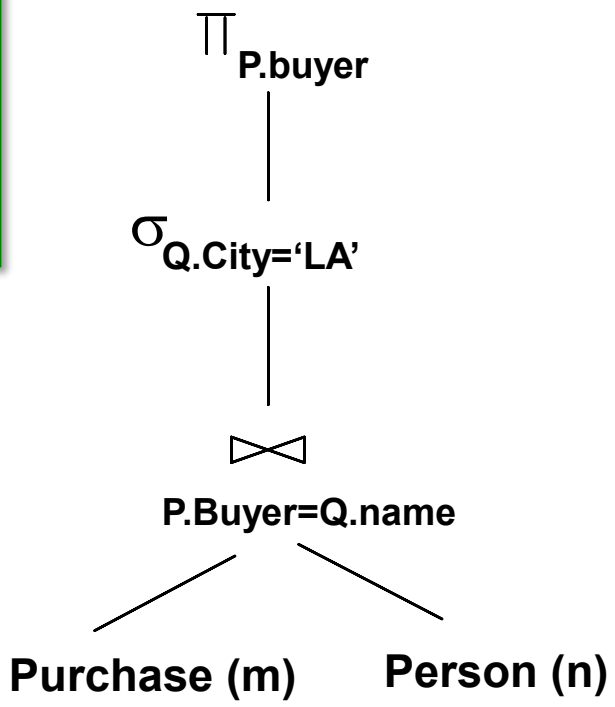

Physical Query Plans

```
SELECT   P.buyer
FROM     Purchase P, Person Q
WHERE    P.buyer=Q.name AND
         Q.city='LA'
```

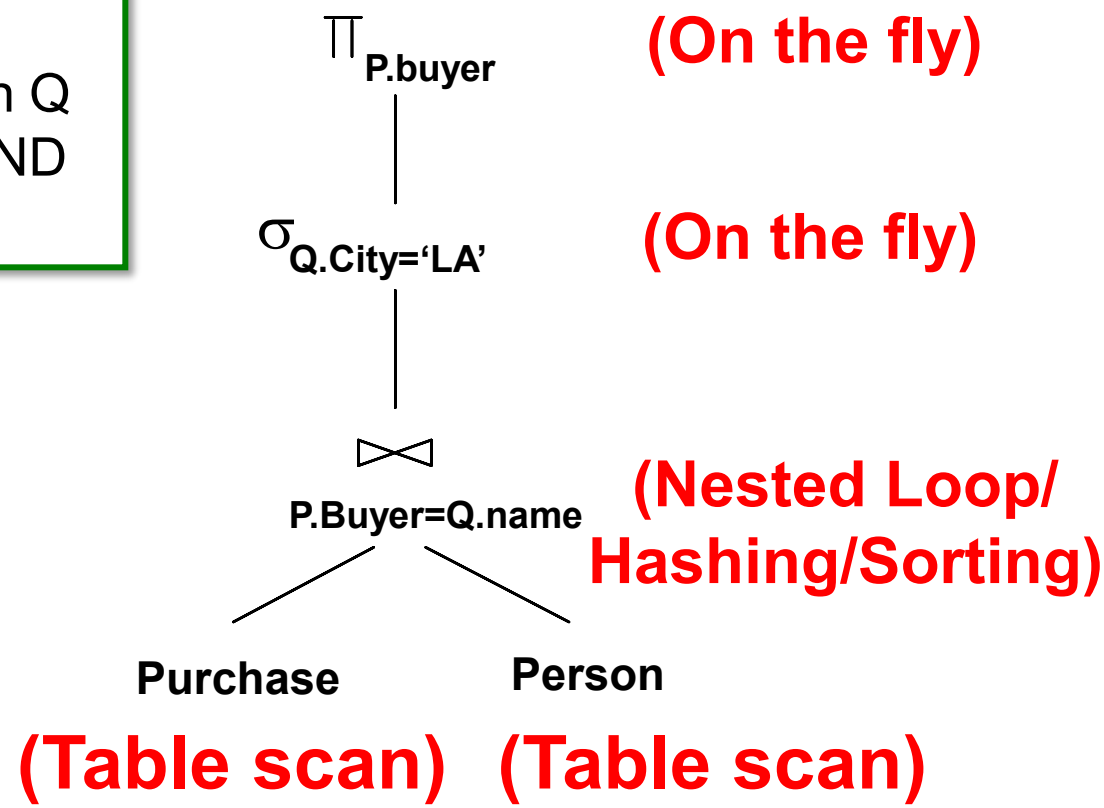

Query Plan:

- Logical tree plus
- Implementation choice at each node

Example

	Purchase	Person
A:	100MB	200MB
B:	100MB	2GB
C:	2GB	2GB

M = 1GB

R1: 500M
R2: 500M
R3: 500M
R4: 500M

P1: 500M
P2: 500M
P3: 500M
P4: 500M

hashing-based:
R1 join P1
R1 join P2
R1 join P3
R1 join P4
R2 join P1
…

How do We Combine Operations?

- The iterator model. Each operation is implemented by 3 functions:
  - *Open*: sets up the data structures and performs initializations
  - *GetNext*: returns the the next tuple of the result.
  - *Close*: ends the operations. Cleans up the data structures.
- Enables pipelining!
- Contrast with data-driven materialized model

Cost Model

- Cost parameters
  - M = number of blocks/pages that are available in main memory
  - B(R) = number of blocks holding R
  - T(R) = number of tuples in R
  - V(R,a) = number of distinct values of the attribute a of R
- Estimating the cost of physical operators:
  - Important in query optimization
  - Here we consider I/O cost only
  - We assume operands are relations stored on disk, but operator results will be left in main memory (e.g., pipelined to next operator in query plan)
  - So we don't include the cost of *writing* the result

Selectivity

- The larger V(R,a), the more selective a is for R

- Employee(<u>ssn</u>, name, age, gender)
  - Which of the above attributes is most/least selective?
  - V(Employee, gender) = 2
  - V(Employee, ssn) = n

I/O Cost

- # of blocks read from or written to disk

- Recall that disk reads/writes data in the unit of block

Scanning Tables

- Reading every row of tables

- The table is *clustered* (i.e., block consists only of records from this table):
  - # of I/O's = # of blocks

- The table is *unclustered* (e.g. its records are placed in blocks with those of other tables)
  - May need one block read for each record

Scanning Clustered/Uncluserted Tables

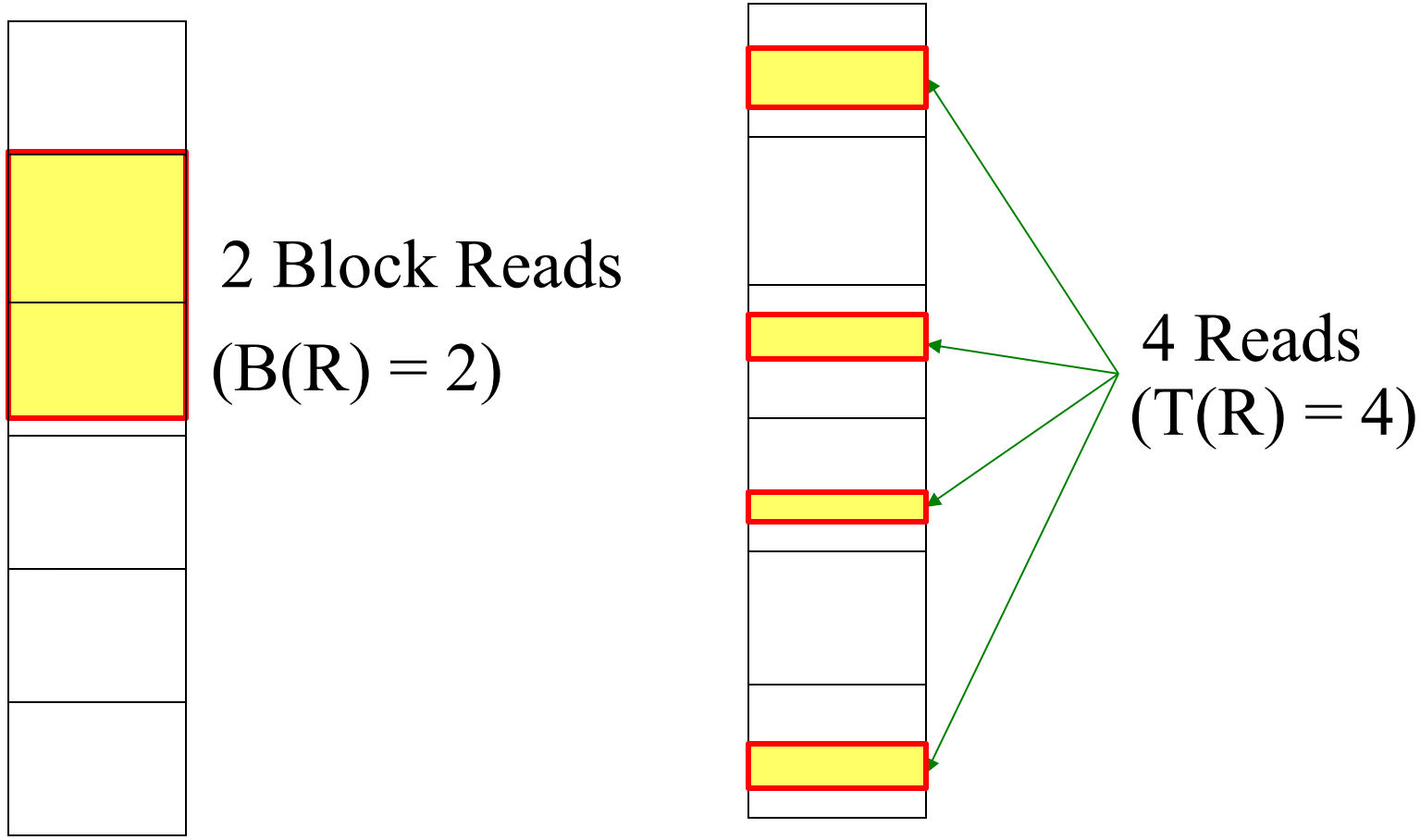

Clustered table

Unclustered table

Cost of the Scan Operator

- Clustered relation:
  - Table scan: B(R)

We assume clustered relations to estimate the costs of other physical operators.

- Unclustered relation:
  - T(R)

Classification of Physical Operators

- One-pass algorithms
  - Read the data only once from disk
  - Usually, require at least one of the input relations fits in main memory
- Nested-Loop Join algorithms (1.x)
  - Read one relation only once, while the other will be read repeatedly from disk
- Two-pass algorithms
  - First pass: read data from disk, process it, write it to the disk
  - Second pass: read the data for further processing

Classification of Physical Operators

- K-pass algorithms
  - If data are too big or memory is too small, the algorithm may need $k > 2$ passes over the data

One-pass algorithms

One-pass Algorithms

Selection σ(R), projection Π(R)

- Both are *tuple-at-a-time* algorithms
- Cost: B(R)

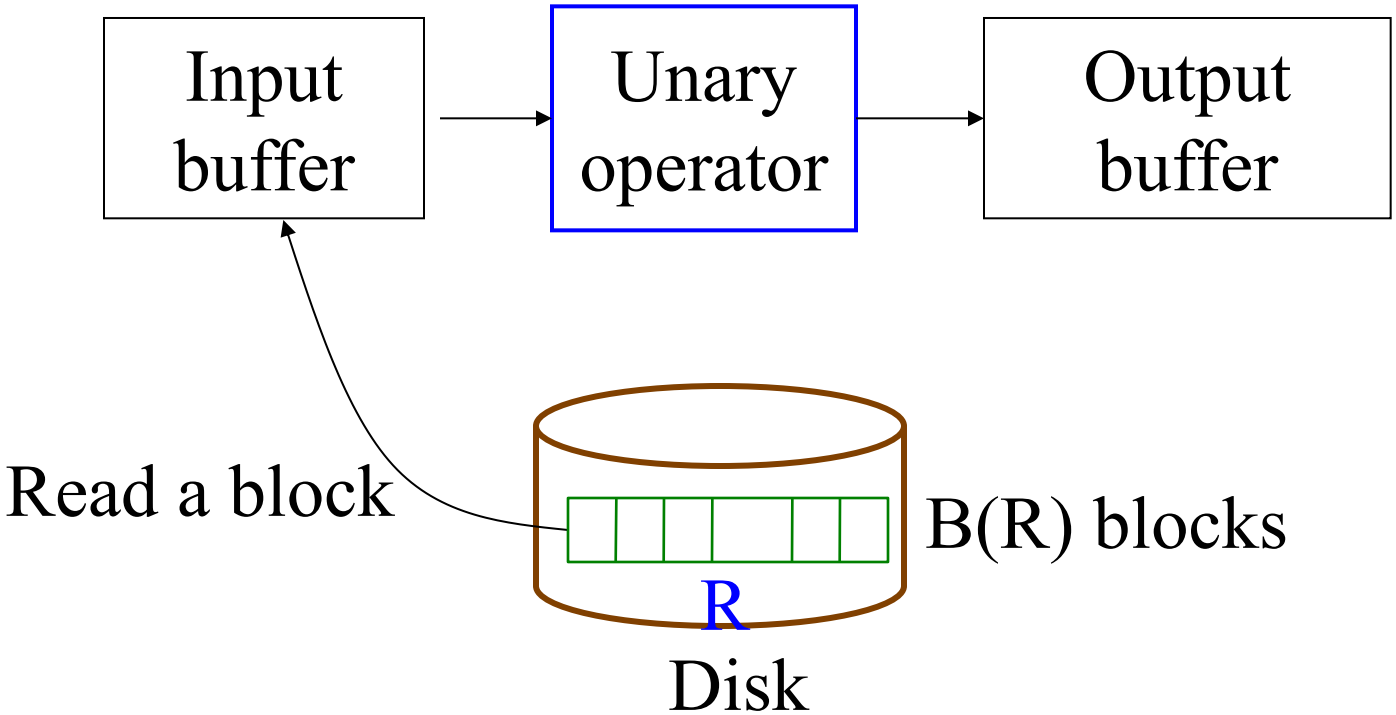

One-pass Algorithms

Duplicate elimination δ(R)

- Need to keep a dictionary in memory:
  - balanced search tree
  - hash table
  - Etc.
- Cost: B(R)
- Assumption:

  B(δ(R)) <= M-2

  or roughly M

La, 2
La, 3
Sfo, 2
Sfo, 4
La, 5
…

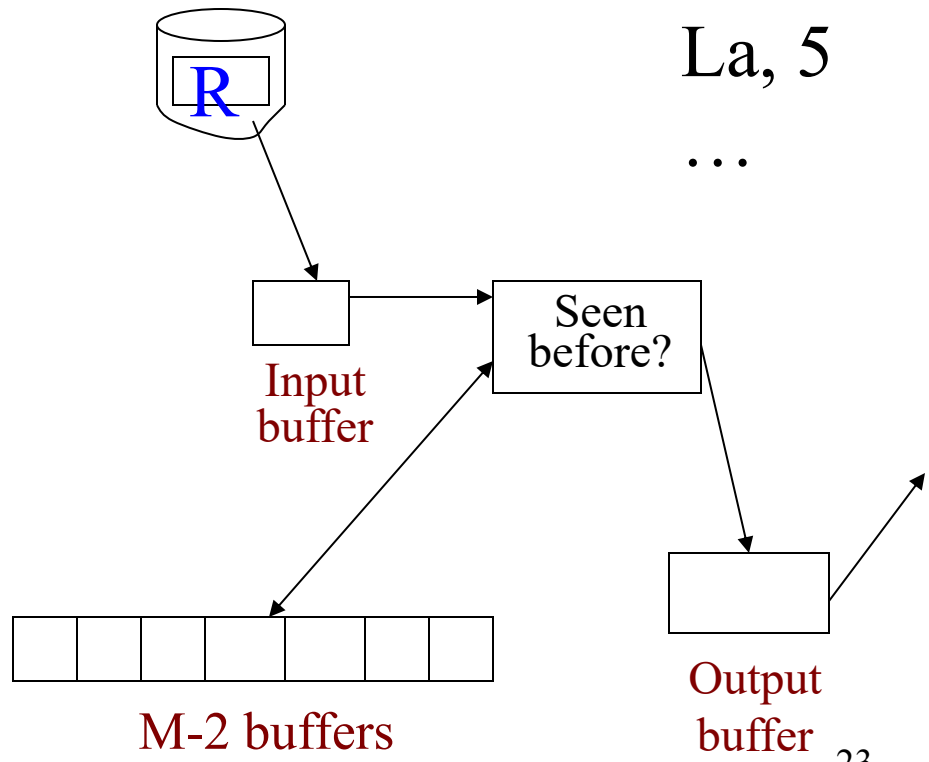

One-pass Algorithms

Grouping: $\gamma_{city,\ sum(price)}$ (R)

- Need to keep a dictionary in memory
  - Also store the sum(price) for each city
- Cost: B(R)
- Assumption: number of cities and sums fit in memory

One-pass Algorithms

Binary operations: $R \cap S$, $R \cup S$, $R - S$, $R \bowtie S$

- Assumption: min(B(R), B(S)) <= M (or M-2 to be exact)
- Scan a smaller table of R and S into main memory, then read the other one, block by block
- Cost: B(R)+B(S) (assume both are clustered)
- E.g. $R \cap S$ (assume set-based, no duplicates)
  - Read S into M-2 buffers and build a search structure
  - Read each block of R, and for each tuple t of R, see if t is also in S.
  - If so, copy t to the output; if not, ignore t

One-pass join algorithm

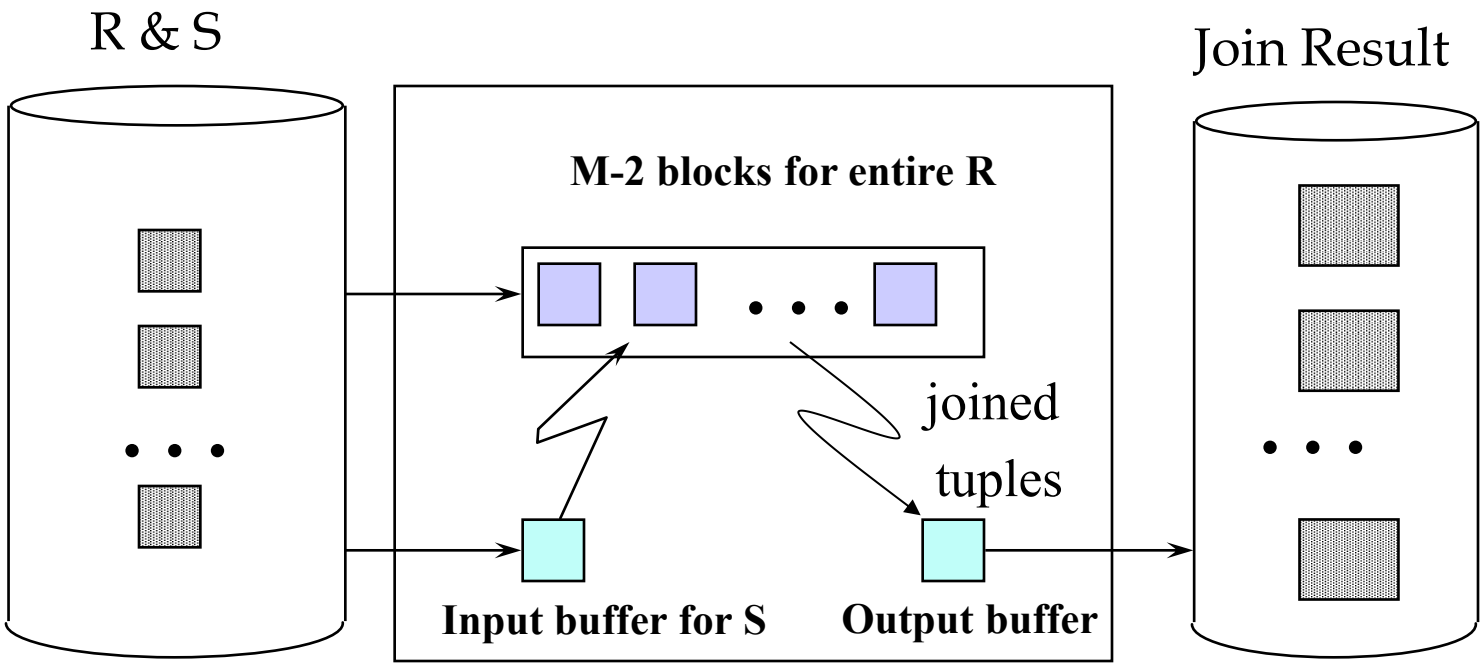

M = 102

B(R) <= 100

Nested-loop join
(none of tables fits in memory…)

Tuple-based Nested Loop Joins

- Join R ⋈ S
- Assume neither relation is clustered

```
for each tuple r in R do
    for each tuple s in S do
        if r and s join then output (r,s)
```

- Cost: T(R) T(S)

Block-based Nested Loop Joins

- Assume both relations are clustered

<u>for</u> each (M-2) blocks b_r of R <u>do</u>
  <u>for</u> each block b_s of S <u>do</u>
    <u>for</u> each tuple r in b_r <u>do</u>
      <u>for</u> each tuple s in b_s <u>do</u>
        <u>if</u> r and s join <u>then</u> output(r,s)

- Assume $B(R) \leq B(S)$ & $B(R) > M$

Block-based Nested Loop Joins

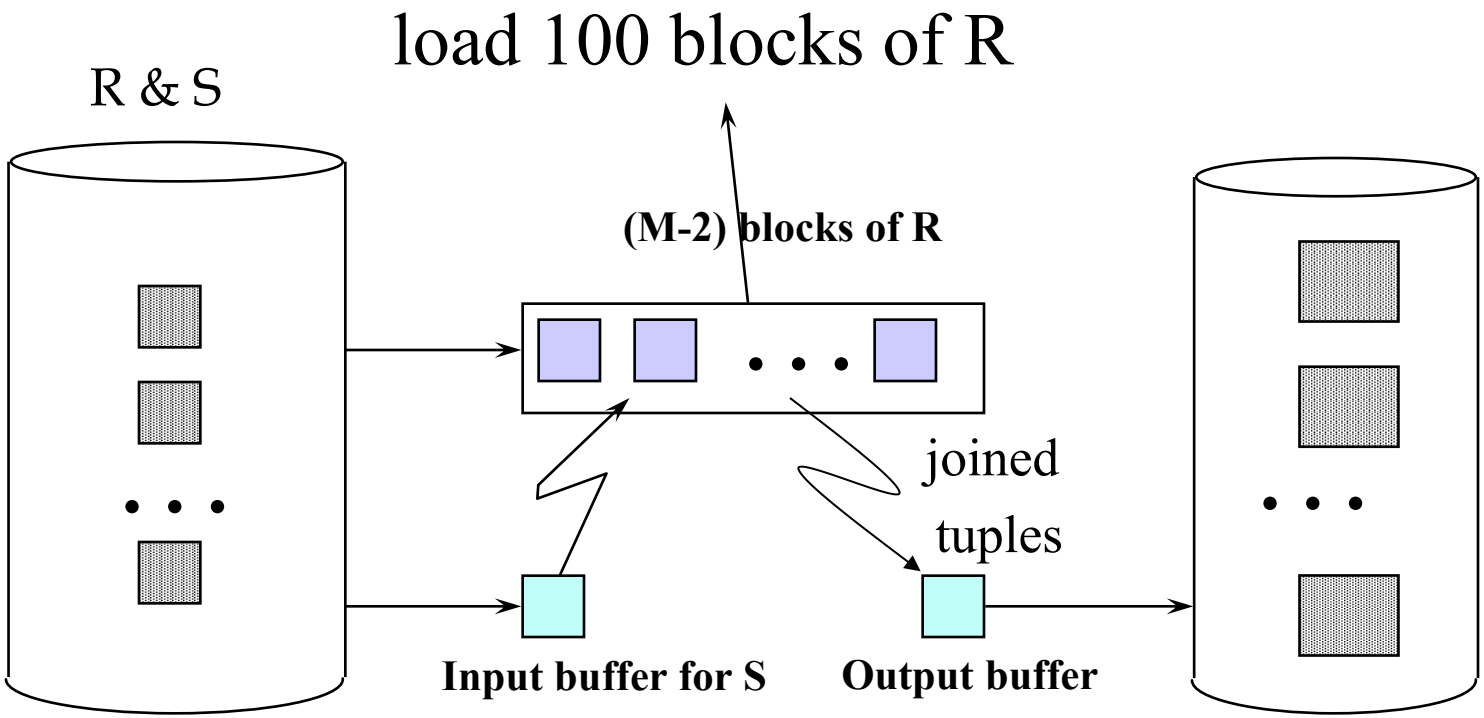

cost(R is outer) = B(R) + B(R)/(M-2) * B(S)

cost(S is outer) = B(S) + B(S)/(M-2) * B(R)

Block-based Nested Loop Joins

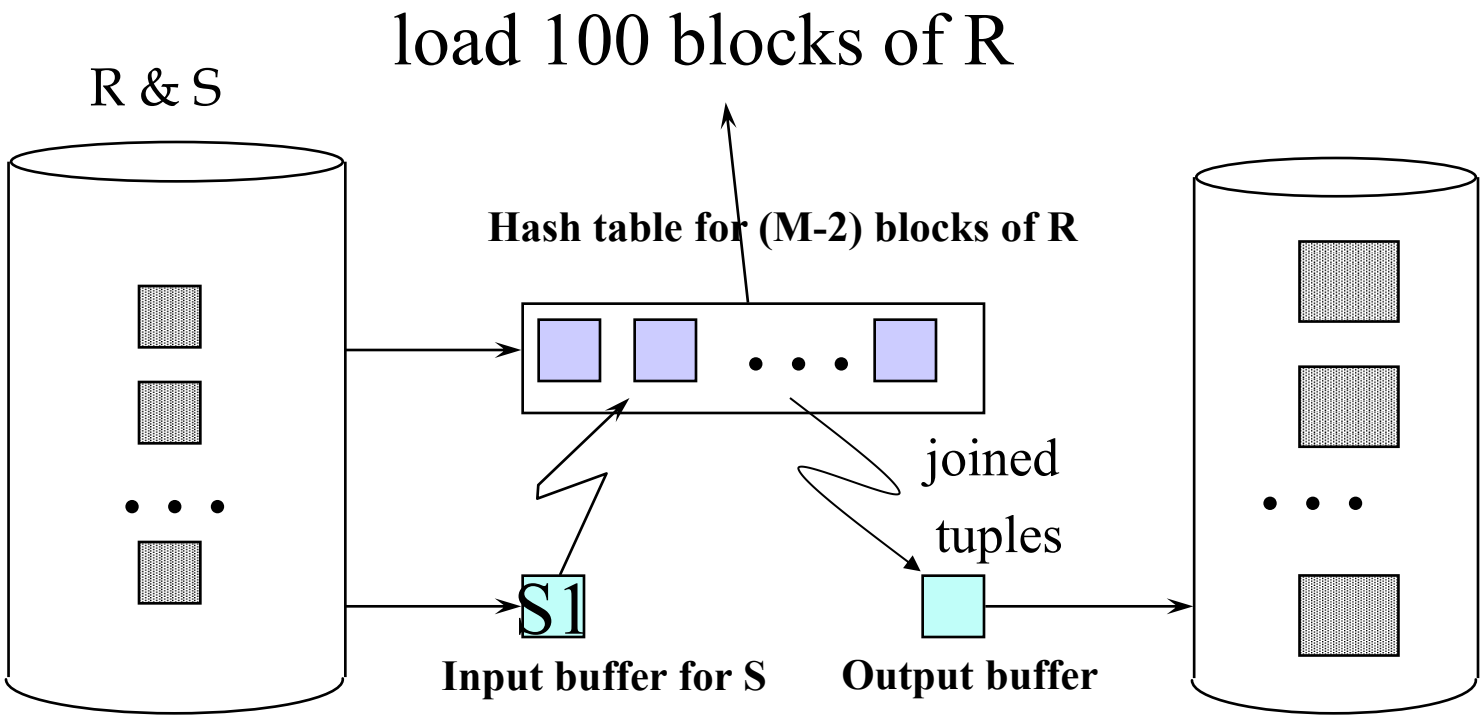

R outer: B(R) + B(R)/(M-2) * B(S)

S outer: B(S) + B(S)/(M-2) * B(R)

M-2 >= 1 => M >= 3

Block-based Nested Loop Joins

- Cost:
  - Read R once: cost B(R)
  - Outer loop runs B(R)/(M-2) times, and each time need to read S: costs B(R)B(S)/(M-2)
  - Total cost: B(R) + B(R)B(S)/(M-2)
- Notice: it is better to iterate over the smaller relation first
- R ⋈ S: R=outer relation, S=inner relation

- What is the minimum memory requirement?

Example

- Suppose M = 102 blocks (i.e., pages), B(R) = 1000 blocks, B(S) = 5,000 blocks
  - # of chunks from R = 10, chunk size = 100 blocks

- Cost of R ⋈ S using block-based nested-loop join algorithm
  - If R is outer relation: one pass R; 10 passes through S
    - 1000 blocks + 1000/(102-2) * 5000 = 51,000
  - If S is outer relation: one pass S; 50 passes R
    - + 5000/(102-2) * 1000 = 55,000

Two-pass algorithms

Two-pass Algorithms

- If an operation can not be completed in one pass, can we design an algorithm to complete it in two passes?
  - Yes, but with certain restriction on the relation size

Ideas

- Sorting
  - Sort relation(s) into runs
  - Perform the needed operation while merging the runs

- Hashing
  - Hash relation(s) into buckets
  - Only need to examine a bucket or a pair of buckets at a time

Duplicate Elimination $\delta(R)$ Based on Sorting

- Simple idea: sort first, then eliminate duplicates
- Pass1: sort runs of size M, write
  - Cost: 2B(R)
- Pass 2: merge M-1 runs, but include each tuple only once
  - Cost: B(R)

- Total cost: 3B(R), Assumption: $B(R) \leq M^2$
  - since B/M = # of runs
  - # of runs has to be <= M-1 to complete the merging in the second pass
  - So $B/M \leq M - 1$

Grouping: $\gamma_{city,\ sum(price)}$ (R) Based on Sorting

- Pass 1: same as before
- Pass 2: same as before, but also compute sum(price) for group during the merge phase.
- Total cost: 3B(R)
- Assumption: $B(R) \leq M^2$

Binary operations: $R \cap S$, $R \cup S$, $R - S$ Based on Sorting

- Idea: sort R, sort S, then do the right thing
- A closer look:
  - Step 1: split R into runs of size M, then split S into runs of size M. Cost: 2B(R) + 2B(S)
  - Step 2: merge M-1 runs from R and S; output a tuple on a case by cases basis
- Total cost: 3B(R)+3B(S)
- Assumption: $B(R)+B(S) \leq M^2$

Merging picture

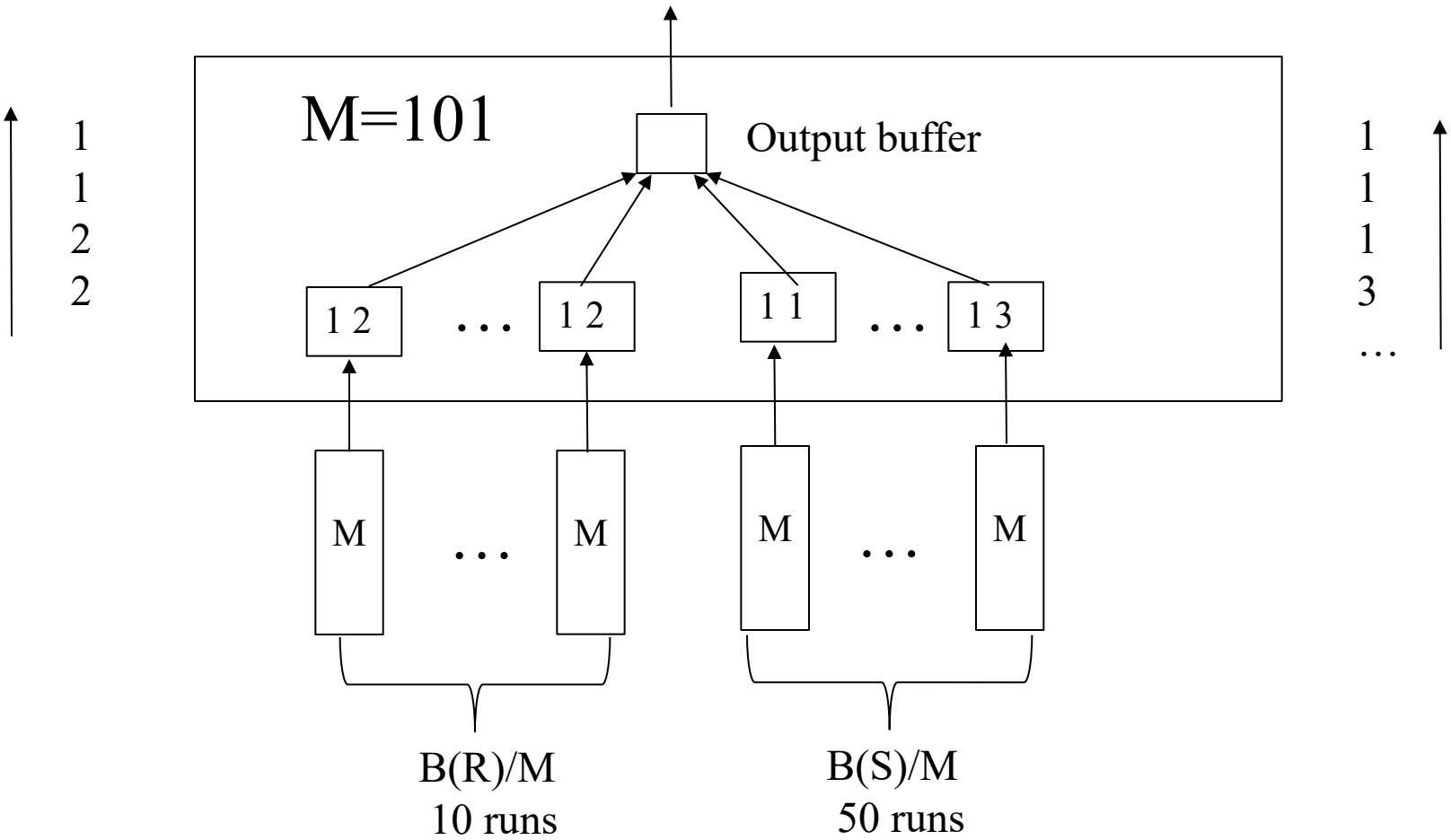

B(R)/(M-1) + B(S)/(M-1) <= M-1

B(R) + B(S) <= (M-1)(M-1) ~ M^2

Problem with join

- A large number of tuples with the same value on the join attribute(s)

- But buffer can not hold all joining tuples (with the same value on join attribute) for at least one relation

Problem with join

Many tuples may have the same value on the join attribute

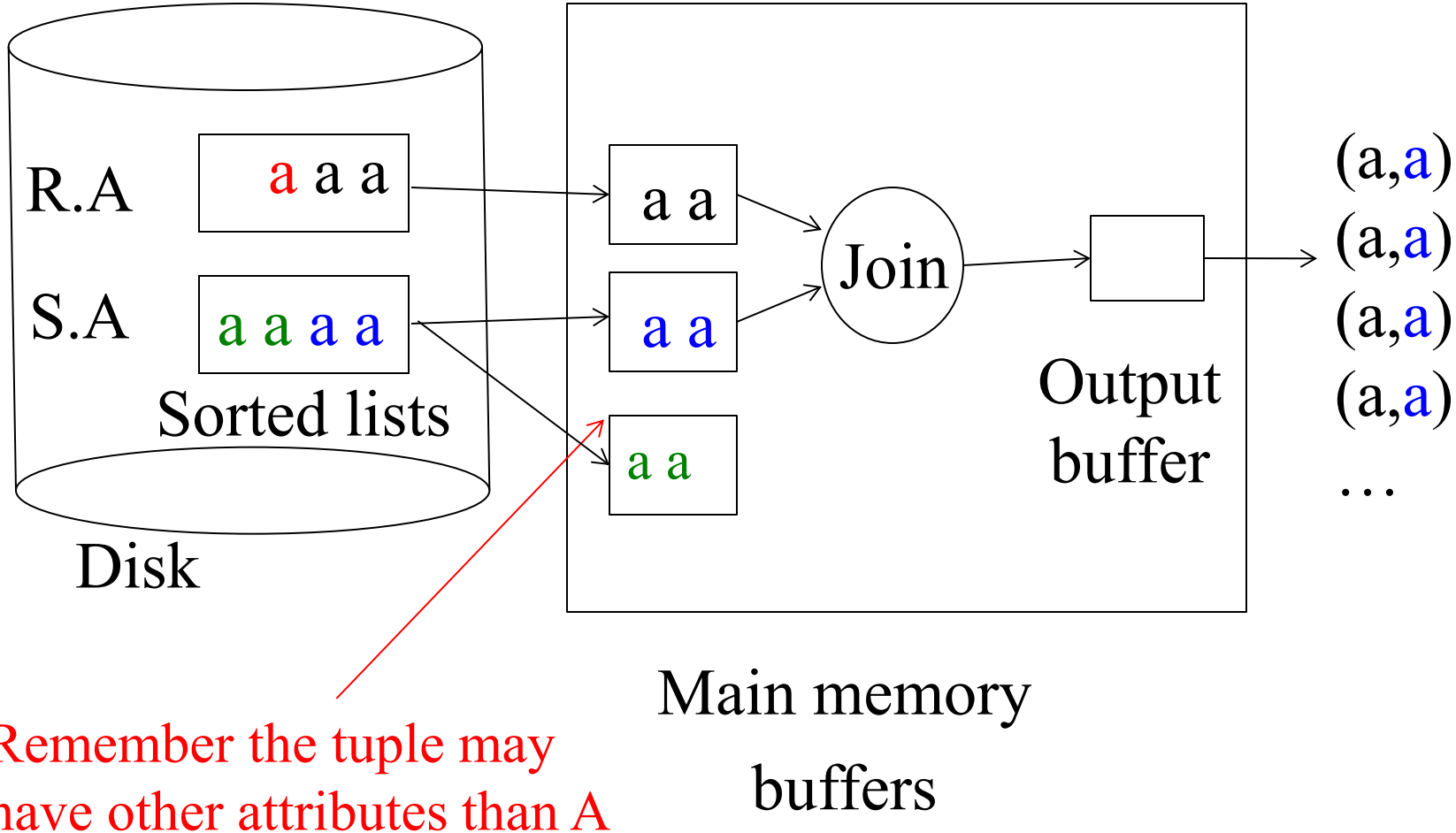

Remember the tuple may have other attributes than A

Sort-Merge Join

- Assume buffer is enough to hold join tuples for at least one relation
  - Note that buffer also needs to hold a block for each run of the other relation

- Total cost: $3B(R)+3B(S)$
- Assumption: $B(R) + B(S) \leq M^2$

Example

- Suppose M = 101 blocks (i.e., pages), B(R) = 1,000 blocks, B(S) = 5000 blocks (R.a = S.a)
  - Suppose we use 100 blocks in sorting

- Cost of R ⋈ S using sort-merge join algorithm
  - Pass 1: sort R => 10 runs, 100 blocks/run

    sort S => 50 runs, 100 blocks/run
  - Pass 2 (merge): B(R) + B(S)
  - total cost: 3B(R) + 3B(S) => 3B(R) + 3B(S)
- What if B(S) = 50,000 blocks?

notes

- M = 101 blocks (100 blocks/pages for sorting)
- B(R) = 5000, B(S) = 50, 000, R.a = S.a

- Sort R => 50 runs, 100 blocks/run
- Sort S => 500 runs, 100 blocks/run
  - Merge 500 runs => 5 runs, 10,000 blocks/run
- Merge 10 runs (from R) with 5 runs (from S)

- 3B(R) + 3B(S) + 2B(S) = 3B(R) + 5B(S)

Simple Sort-based Join

- Start by completely sorting both R and S on the join attribute (assuming this can be done in 2 passes):
  - Cost: 4B(R)+4B(S) (because we need to write result to disk)
- Read both relations in sorted order, match tuples
  - Cost: B(R)+B(S)

- Can use as many buffers as possible to load join tuples from one relation (with the same join value), say R
  - Only one buffer is needed for the other relation, say S

- If we still can not fit all join tuples from R
  - Need to use nested loop algorithm, higher cost

Simple Sort-based Join

- Total cost: 5B(R)+5B(S)

- Assumption: B(R) <= M^2, B(S) <= M^2, and at least one set of the tuples with a common value for the join attributes fit in M (or M-2 to be exact)
  - Note that we only need one page buffer for the other relation

Example

- Suppose M = 101 blocks (i.e., pages), B(R) = 1,000 blocks, B(S) = 5,000 blocks
  - Assume that we use 100 blocks for sorting pass

- Cost of R ⋈ S using simple sort-based join algorithm
  - Sort R (completely) => R': 4B(R) = 4000
  - Sort S => S': 4B(S) = 20,000
  - Join by merging R' with S': B(R) + B(S) (loading)
- What if B(S) = 50,000 blocks?
  - 500 runs => 5 runs => 1 run

Notes

- M = 101 (but 100 for sorting)
- B(R) = 1000 blocks

- completely sort R => R':
  - pass 0: load 100 blocks of R at a time => 10 runs
  - pass 1: merge 10 runs into a single run
  - cost: 2 * 2 * 1000 = 4000 or 4B(R)
- completely sort S => S':
  - cost: 4B(S)

Notes

- join R' with S', each having a single run

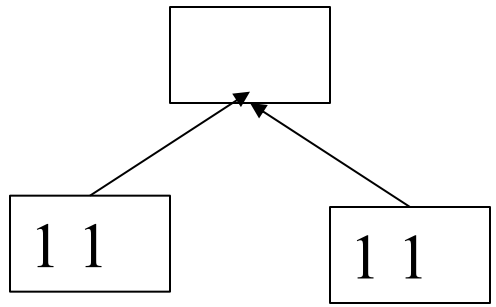

R'	S'
1 1	1 1
2 2	2 3
3 3	4 5
…	…

(1, 1)
(1, 1)
(1, 1)
(1, 1)
(2, 2)
(2, 2)
(3, 3)
(3, 3)
…

Notes

- M = 101 (but 100 for sorting)
- B(R) = 1000 blocks

- completely sort R => R':
  - cost: 2 * 2 * 1000 = 4000 or 4B(R)
- completely sort S => S':
  - pass 0: 50,000 blocks => 500 runs
  - merge 1: 500 runs => 5 runs
  - merge 2: runs => 1 run
  - cost: 3* 2B(S) = 6B(S)

Notes

Sorting R (completely):
B(R) + B(R) // 10 runs
B(R) + B(R) // 1 run
= 4B(R)

Sorting S:
= 4B(S)

Merging R and S:
B(R) + B(S)

Two-Pass Algorithms Based on Hashing

Hashing-Based Algorithms

- Hash all the tuples of input relations using an appropriate hash key such that:
  - All the tuples that need to be considered together to perform an operation go to the same bucket
- Reduce the size of input relations by a factor of M
- Perform the operation by working on a bucket (or a pair of buckets for binary operations) at a time
  - Apply a one-pass algorithm for the operation

Sorting vs. Hashing

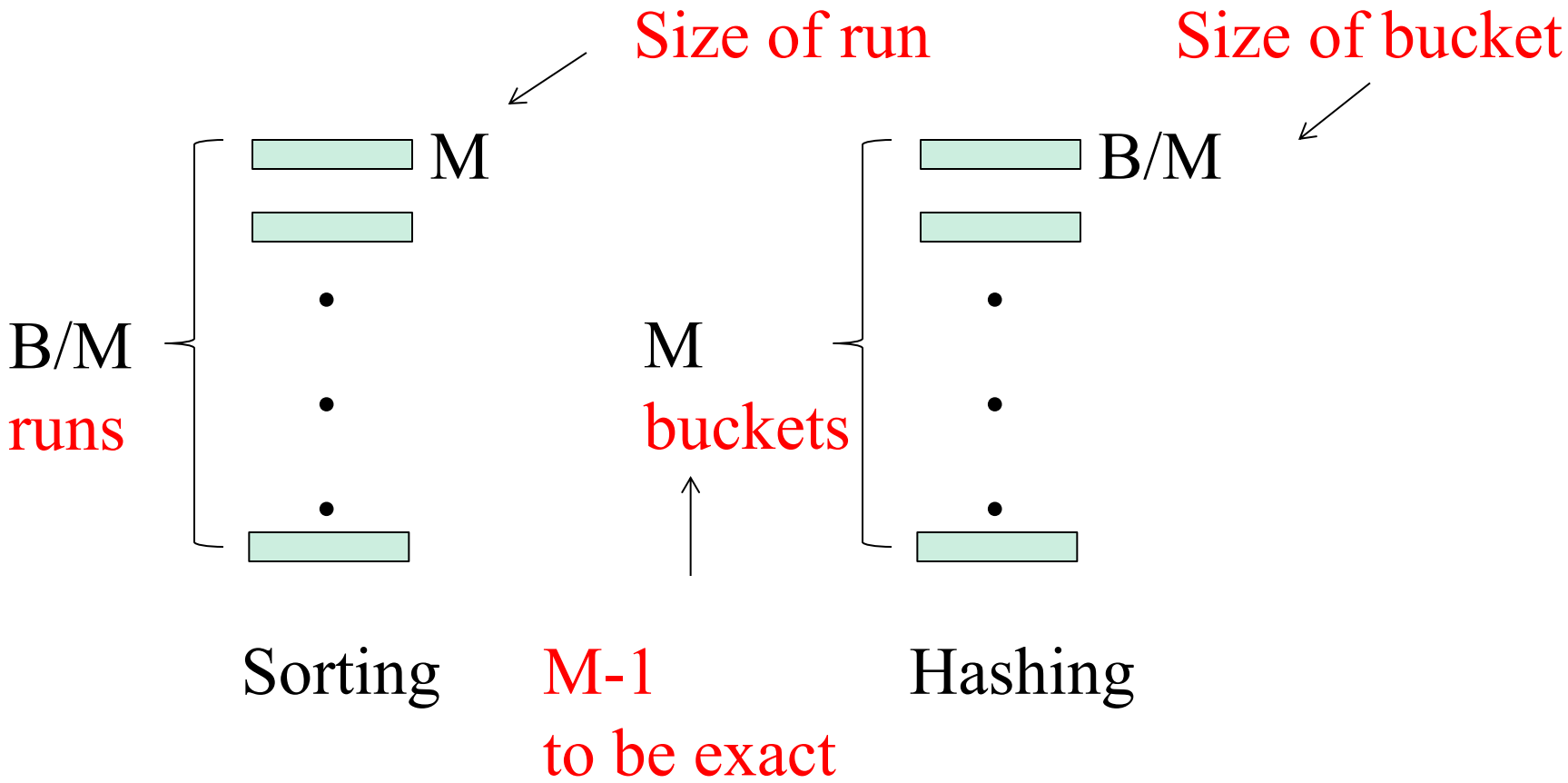

"Partitioning" picture

Hashing-Based Algorithm for δ

- Recall: $\delta(R)$ = duplicate elimination
- Step 1. Partition R into (M-1) buckets
- Step 2. Apply δ to each bucket (must read it into main memory)

- Cost: 3B(R)
- Assumption: $B(R) <= M^2$
  - To be more exact: $B(R)/(M-1) <= M-2$

Two-Pass Duplicate Elimination Based on Hashing

- Idea: partition a relation R into buckets, on disk
- Each bucket has size approx. B(R)/M

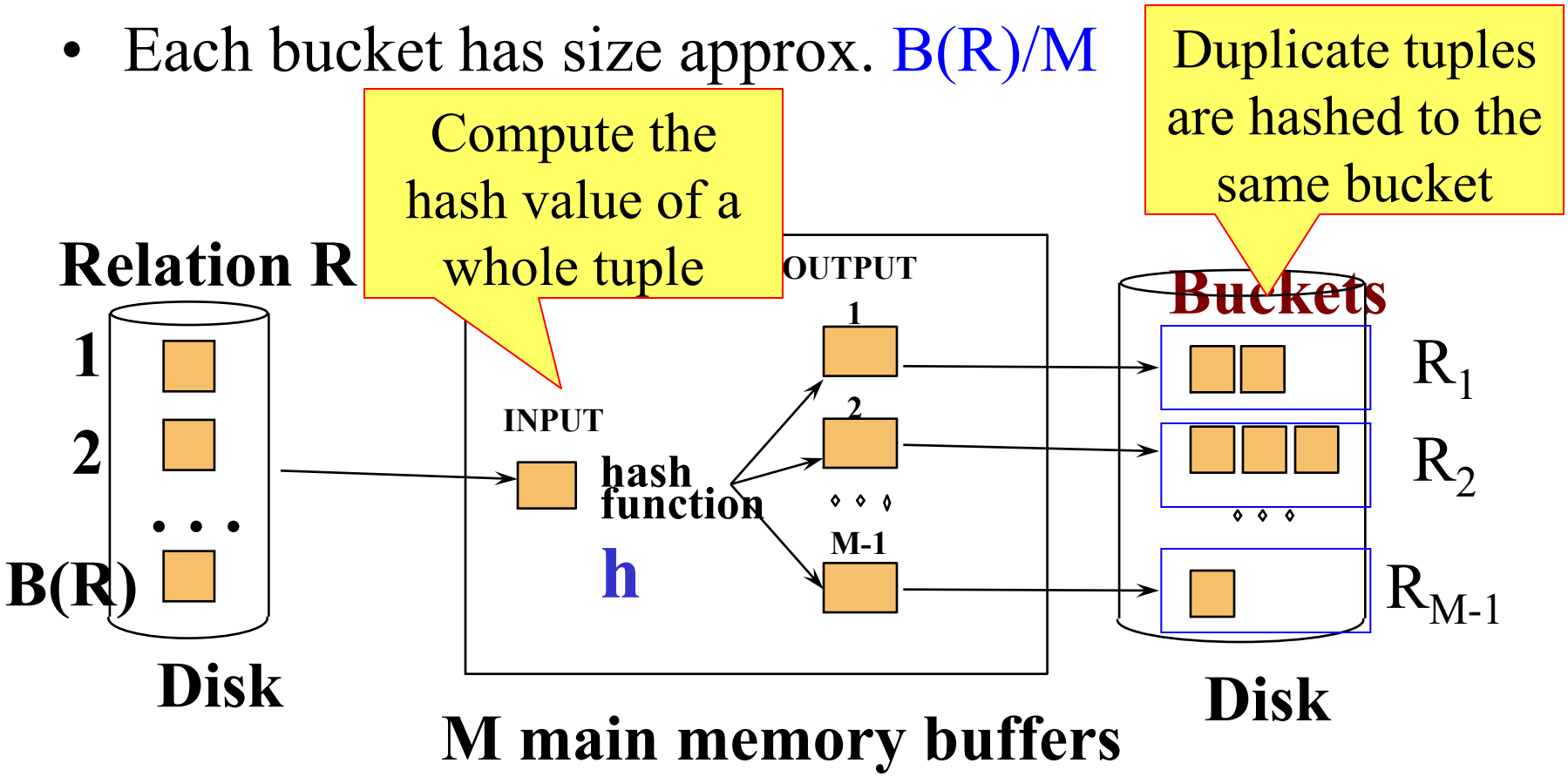

Two Pass Duplicate Elimination Based on Hashing

- Does each bucket fit in main memory ?
  - Yes if $B(R)/(M-1) <= M-2$ (i.e., approx. $B(R) <= M^2$)
- Apply the one-pass δ algorithm for each R_i

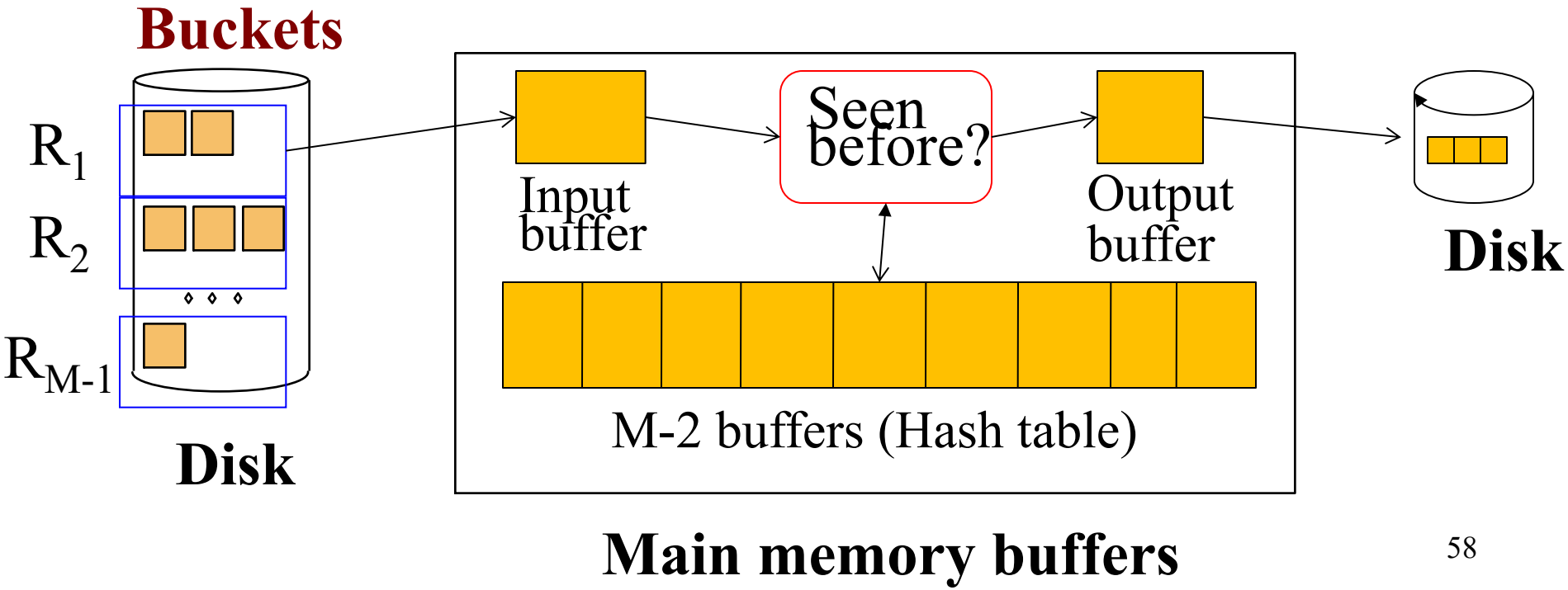

Partitioned Hash Join

$R \bowtie S$

- Step 1.a:
  - Hash S into M – 1 buckets
  - send all buckets to disk
- Step 1.b
  - Hash R into M – 1 buckets
  - Send all buckets to disk
- Step 2
  - Join every pair of corresponding buckets

Partitioned Hash-Join

- Partition tuples in R and S using join attributes as key for hash
- Tuples in partition R_i only match tuples in partition S_i.

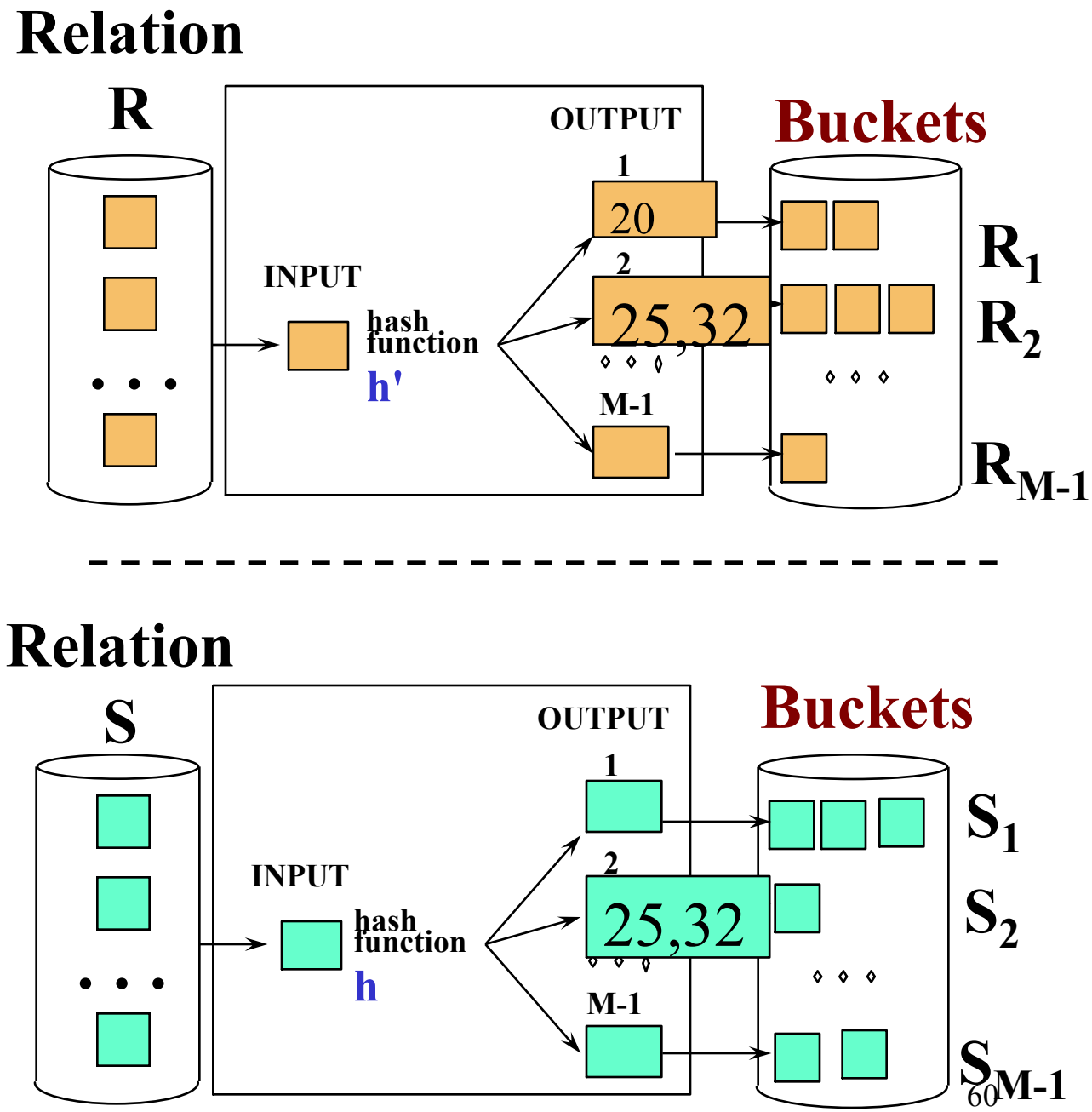

Partitioned Hash-Join: Second Pass

- Read in a partition of R, say R_i
- Load (possibly part of) the matching partition S_i, output joining tuples.

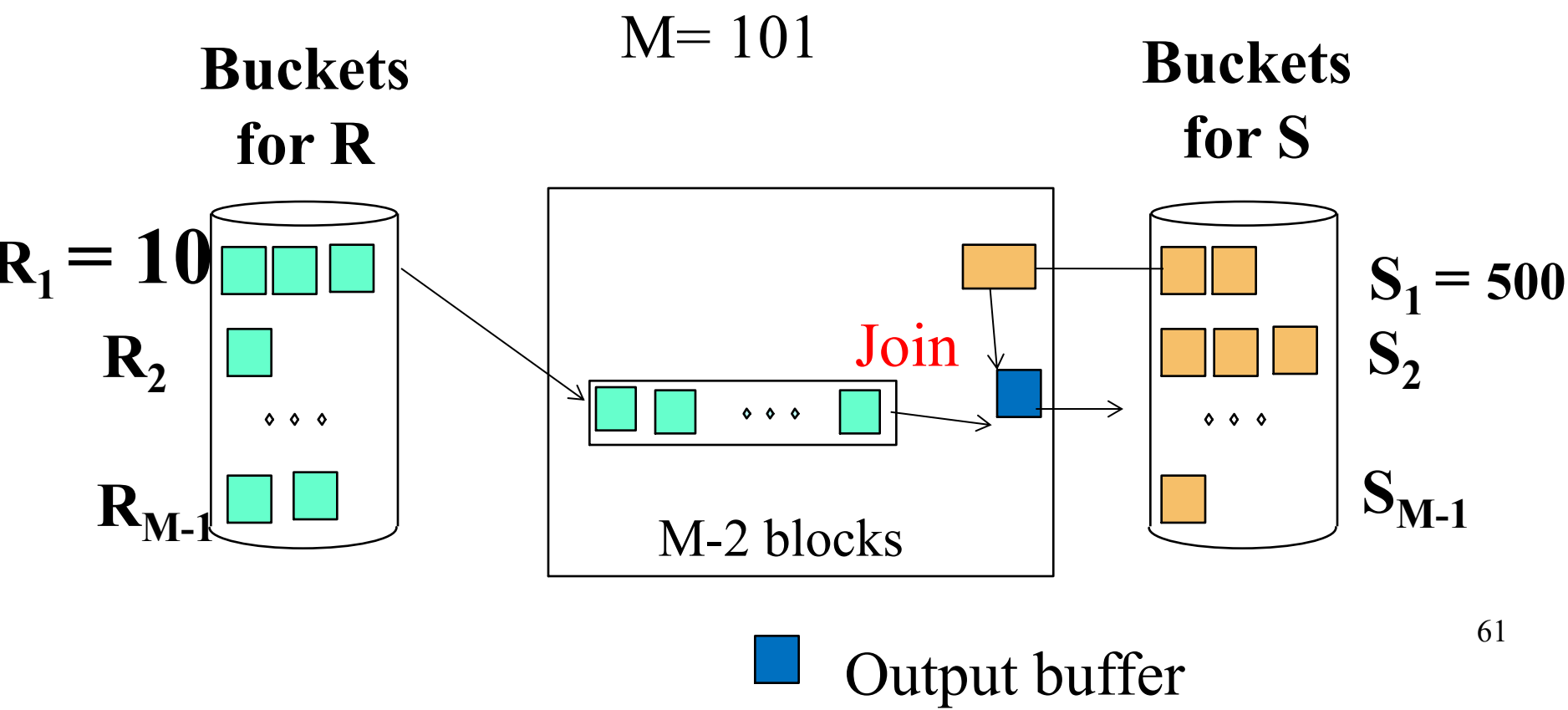

Partitioned Hash Join

- Cost: 3B(R) + 3B(S)
- Assumption: min(B(R), B(S)) <= M^2
  - min(B(R), B(S))/(M-1) <= M-2

Example

- Suppose M = 101 blocks (i.e., pages), B(R) = 1,000 blocks, B(S) = 5000 blocks (R.a = S.a)

- Partitioning:
  - Hash R into 100 buckets, 10 blks/bucket; cost: 2B(R)
  - Hash S into 100 buckets, 50 blks/bucket; cost: 2B(S)
- Join:
  - join R1 with S1, R2 with S2, …, R_100 with S_100
  - Cost: B(R) + B(S)
- Cost: 3B(R) + 3B(S)

what if

- M = 101, B(R) = 1,000, B(S) = 50, 000 blocks

- Partition
  - R => R1, …, R100, 10 blocks/bucket, cost: 2B(R)
  - S => S1, …, S100, 500 blocks/bucket, cost: 2B(S)

- Join R1 with S1, …
  - E.g., load R1 entirely into memory (10 blocks used)
  - load S1 90 blocks at a time
  - cost: B(R) + B(S)

what if

- M = 101, B(R) = 20,000, B(S) = 50, 000 blocks

- partition
  - R => R1, …, R100, 200 blocks/bucket, cost: 2B(R)
  - S => S1, …, S100, 500 blocks/bucket, cost: 2B(S)

Sort-based vs. Hash-based Algorithms

- Hash-based algorithms for binary operations have a size requirement only on the smaller of two input relations
- Sort-based algorithms sometimes allow us to produce a result in sorted order and take advantage of that sort later
- Hash-based algorithm depends on the buckets being of equal size, which may not be true if data are skewed

Index-Based Algorithms

Index-based Algorithms

- The existence of an index on one ore more attributes of a relation makes available some algorithms that would not be feasible without the index
- Useful for selection operations
- Also, algorithms for join and other binary operations use indexes to good advantage

Clustered indexes

- In a clustered index, all tuples with the same value of the search key appear on roughly as the number of blocks as can hold them
  - That is, they are clustered together

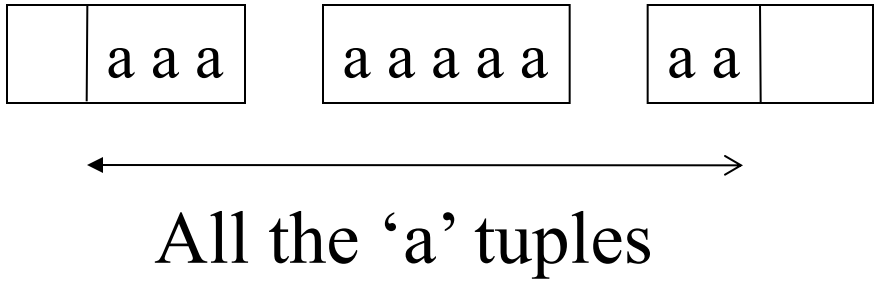

Index Based Selection

- Selection on equality: $\sigma_{a=v}(R)$
- Clustered index on attribute a: cost = B(R)/V(R,a)
- Unclustered index on a: cost = T(R)/V(R,a)

We here ignore the cost of reading index blocks

Index Based Selection

- Example: B(R) = 2000, T(R) = 100,000, V(R, a) = 20, compute the cost of $\sigma_{a=v}(R)$

- Cost of using table scan:
  - If R is clustered: B(R) = 2000 I/Os
  - If R is unclustered: T(R) = 100,000 I/Os

Compare this

- Cost of index-based selection:
  - If index is clustered: B(R)/V(R,a) = 100
  - If index is unclustered: T(R)/V(R,a) = 5000

Index-Based Join

- $R \bowtie S$
- Assume S has an index on the join attribute
- Iterate over R, for each tuple, fetch corresponding tuple(s) from S
- Assume R is clustered. Cost:
  - If index is clustered: $B(R) + T(R)B(S)/V(S,a)$
  - If index is unclustered: $B(R) + T(R)T(S)/V(S,a)$
- Compare this to NLJ (both R & S clustered)
  - $B(R) + B(R)/(M-2) * B(S)$

Indexed-Based Join vs. NLJ

- Index-based (R clustered, clustered index S.a)
  - B(R) + T(R)B(S)/V(S,a)
- NLJ (R & S clustered)
  - B(R) + B(R)/(M-2) * B(S)

- Index-Based wins if:
  - T(R)/V(S,a) < B(R)/(M-2), or
  - V(S,a) > (M-2) * T(R)/B(R)

Index-Based Join: Clustered Index

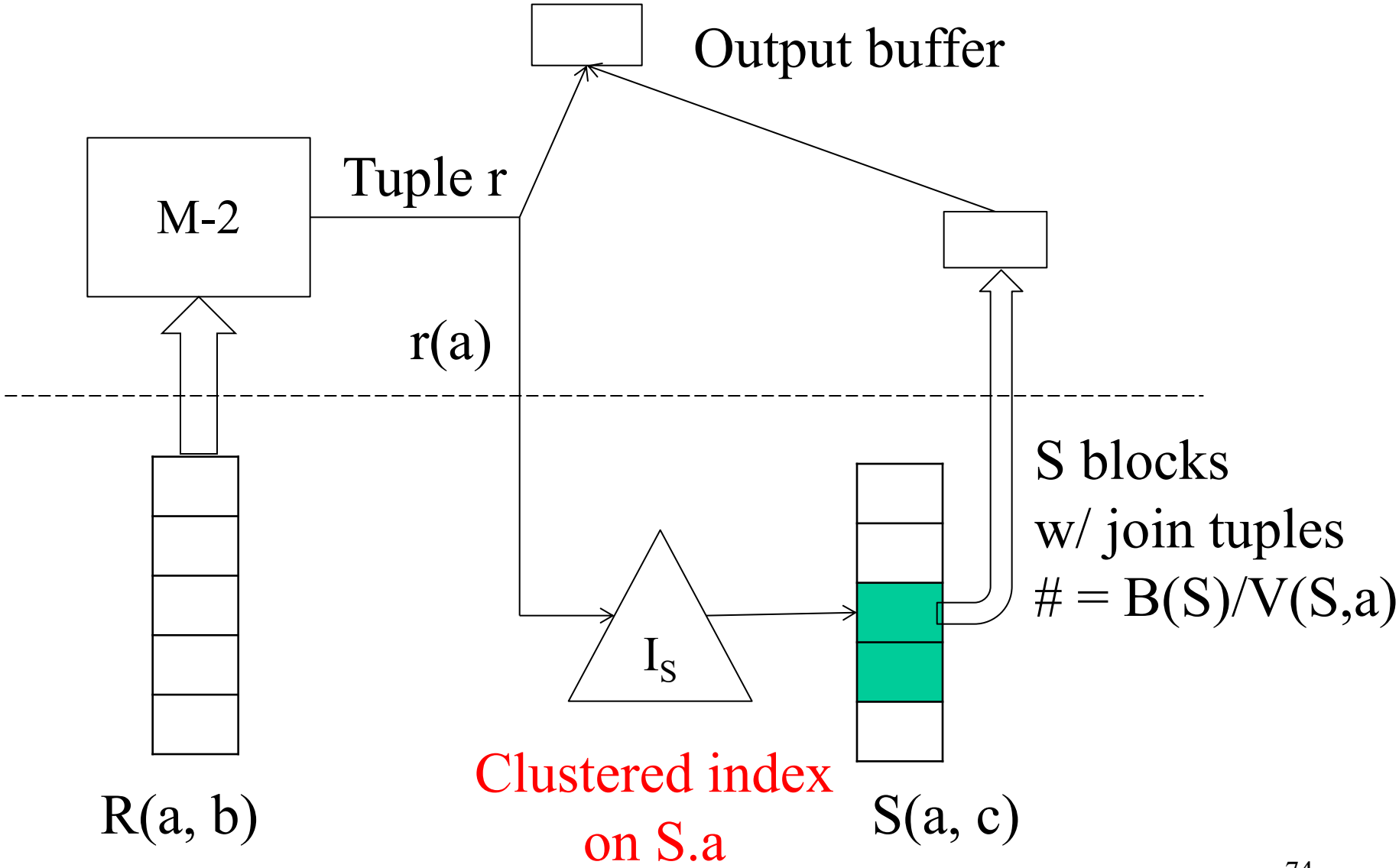

Index-Based Join: Unclustered Index

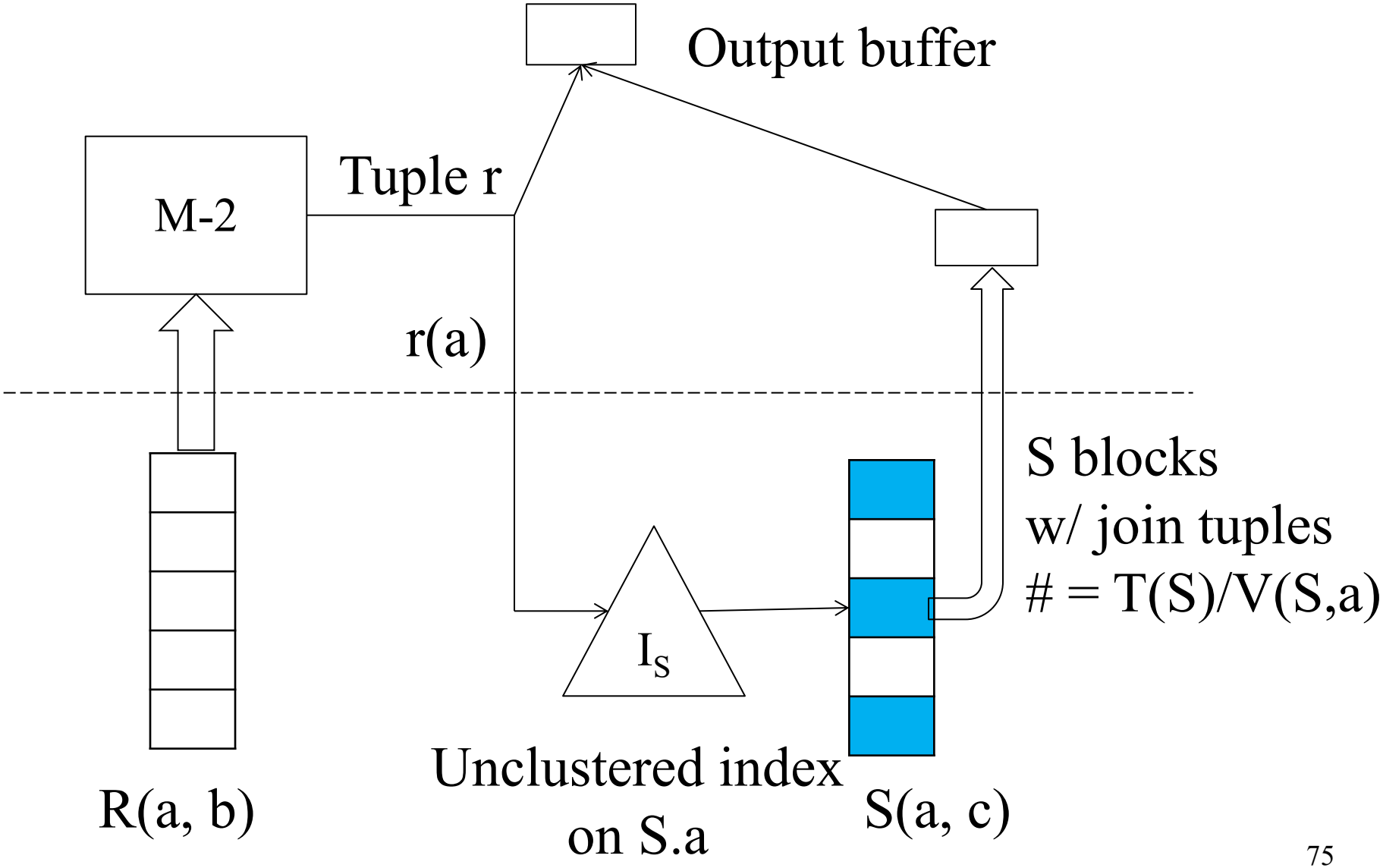

Example

- Suppose M = 102 blocks (i.e., pages)
- R(a, b) ⋈ S(a, c)
- S has an index on attribute "a" and V(S,a) = 100
- B(R) = 1,000 blocks, B(S) = 5,000 blocks
- T(R) = 10,000 tuples, T(S) = 50,000 tuples

- Cost of R ⋈ S using index-based join algorithm
  - Index on S.a is clustered
  - Index on S.a is unclustered

Index-Based Join: Two Indexes
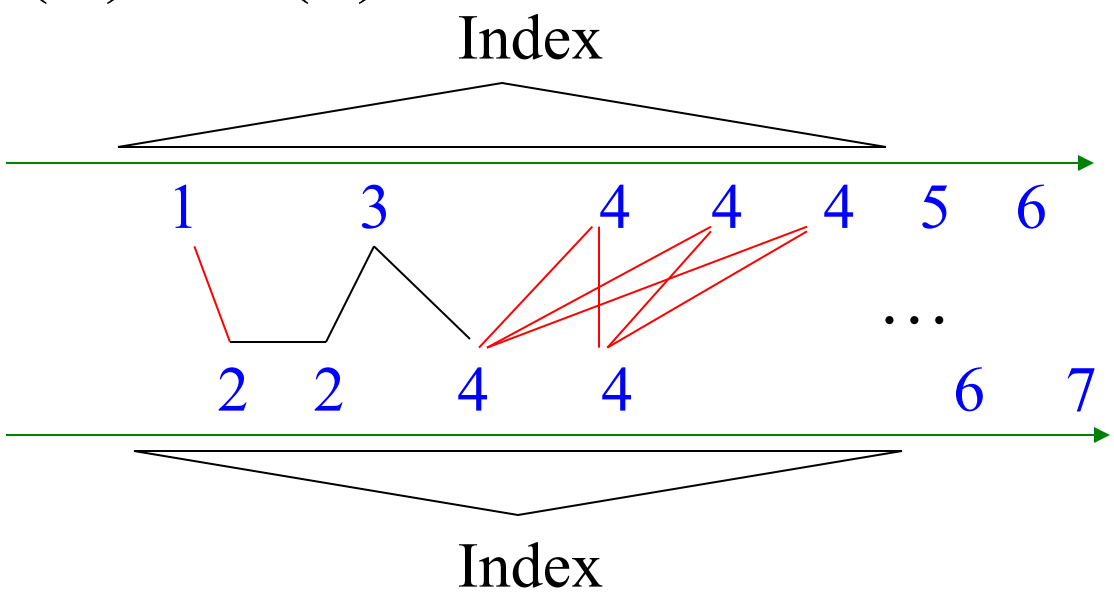
- Assume both R and S have a clustered index (e.g., B+-tree) on the join attribute
- Then can perform a sort-merge join where sorting is already done (for free)
- Cost: B(R) + B(S)